'Engineering for perfection'
yapıray

OUR PURPOSE
IS TO SIMPLIFY
Perfection

yapıray

Contents

6 COMPANY PROFILE
- 8 Construction
- 9 Rehabilitation
- 10 Manufacture
- 11 Design
- 12 Health and Safety
- 13 Think Green
- 14 Challenges

16 HISTORY

18 KEY FIGURES

20 PROJECTS

38 MACHINERY PARK

40 PRODUCTS

70 REFERENCES

72 LABORATORIES

74 CERTIFICATES

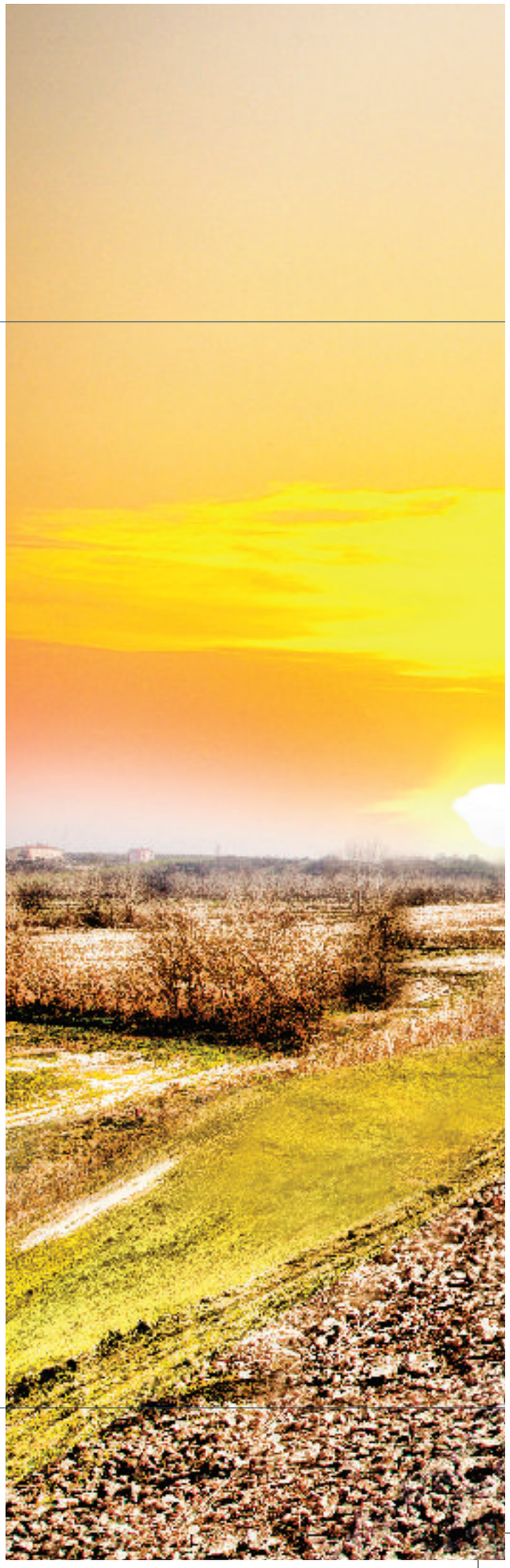

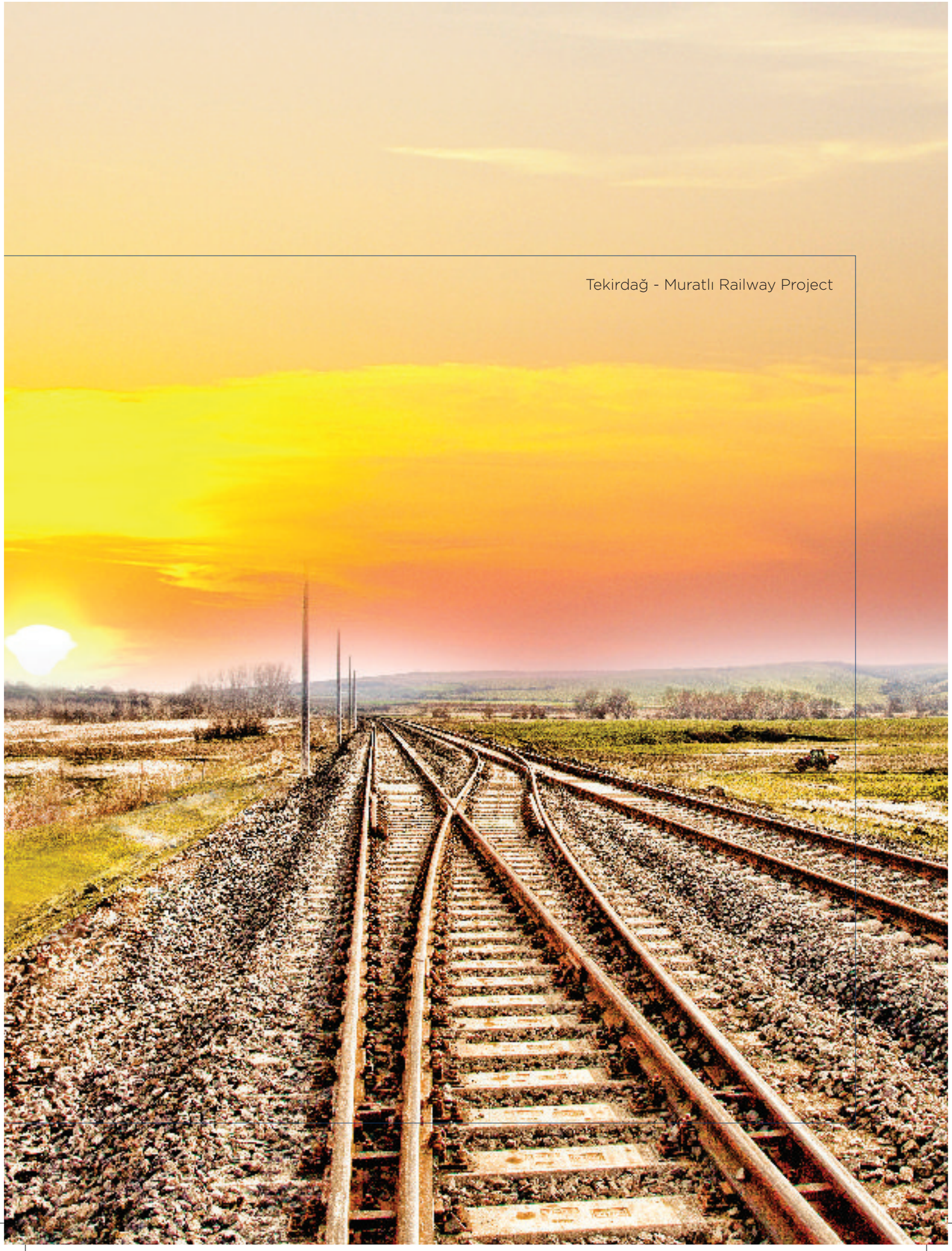
Tekirdağ - Muratlı Railway Project

DESIGN
MANUFACTURE
Construct

YAPIRAY, with the objective of serving in the construction of railway systems, was established within the body of YAPI MERKEZİ, as a specialist company by counting on the acquired experiences as its intellectual capital.

YAPIRAY has successfully carried out design and implementation experience, which includes various engineering solutions in railway systems, to the present thanks to well-organized human resources and specialized machinery park.

The main objective of YAPIRAY is to maintain sustainability and trust that has been established as a result of activities in the railway systems.

Since 1998, YAPIRAY is a multifunctional company which can manage every scale of Turnkey Railway Projects and rehabilitation works on railway lines under traffic operation with high engineering design solutions. At the same time YAPIRAY is the manufacturer of various types of prefabricated concrete elements for railway systems.

Bozkurt - Dinar Railway Renewal Construction

ACCURATE
EFFICIENT
Continuous

YAPIRAY's main objective is to fulfil railway constructions in the most efficient and accurate way with its huge experience in managing various projects under tough and challenging conditions simultaneously. Yet, this is not enough. That's why, we look forward to scaling up our targets continuously.

Awash - Kombolcha - Hara Gebaya Railway Project

IMPROVE
SUSTAIN
Rehabilitate

Track rehabilitation is essential to achieve the sustainability of railway line operations. In consequently, YAPIRAY is ready to renew the railway lines across the globe. To the present, rehabilitation of 500 km railway lines has been a magnificent experience and success for YAPIRAY.

Irmak - Karabük - Zonguldak Railway Rehabilitation Project

PRECISION
DURABILITY
Quality

YAPIRAY provides prefabricated concrete products with high-level of quality and long service life. RAYTON® and RAYKAS® sleeper plants are at the customers' services constantly for production of railway elements for main lines and turnouts. Moreover, YAPIRAY provides mobility of the plants nearby big-scale execution works based on special needs of the projects. Besides, settled plants are aiming to satisfy customers' needs all the time. YAPIRAY assures robustness of all products in accordance with EN 13230 series / AREMA based on the request of the employer.

Rayton Afyon Sleeper Factory

DESIGN
DEVELOP
Realize

Need-based products are the backbone of research and development for us. Thanks to our 20 years of knowledge in railway engineering, tailor-made solutions for each customer are provided by our in-house design department. YAPIRAY response to customer needs with innovative solutions including but not limited to European Norms, UIC and AREMA standards.

Ankara - Konya High Speed Railway Line

FOCUS CONCENTRATE *Health and Safety*

YAPIRAY carries on being a forerunner in railway systems by providing quality solutions that combines its policies with experience. YAPIRAY plans and carries out all of its activities primarily by focusing on “Occupational Health and Safety”.

YAPIRAY aims to make its Quality, Occupational Health and Safety Management Systems sustainable with the active participation of all its employees and suppliers. We undertake to fulfil the legal and related legislative requirements to meet the obligations arising from the agreements and to provide the internal and external stakeholders with the requirements arising from their institutional responsibilities.

İzmir Metro Track Laying Works

SUSTAIN ENVIRONMENT *Think Green*

As YAPIRAY we care about people. We connect them with their beloved ones but also we feel a responsibility to leave a better planet to future generations in shape than we found. From the design phase to the execution on site, we focus on reduction of our own carbon footprint by searching the optimum solutions.

BEAT
BEAT AGAIN
Challenges

Extreme Temperatures
from -30°C degree to 50°C degree

Extreme Altitudes
under Bosphorus (-62 m) to the highest mountains of Ethiopia (+2800 m)

Under Traffic Operation
track rehabilitation without interrupting the train operation (track usage 72 hrs. YAPIRAY, 48 hrs. TCDD)

Well-Organized Operation
7 different projects in 4 different countries in 3 different continents

Supersonic Line
1.5 Mach (1850 km/h) max speed *(No, there is no typo mistake!)*

Heavy or Speed
up to 35 tons of axle load or up to 300 km/h at high speed lines

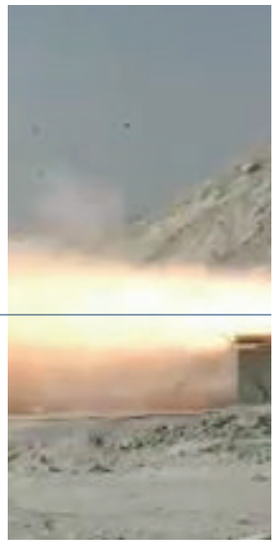

2800 meter Ethiopia
Mountains

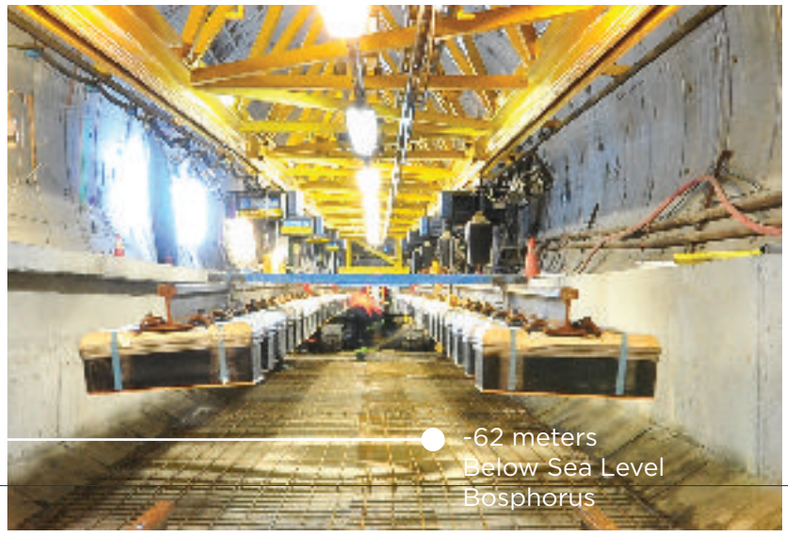
-62 meters
Below Sea Level
Bosphorus

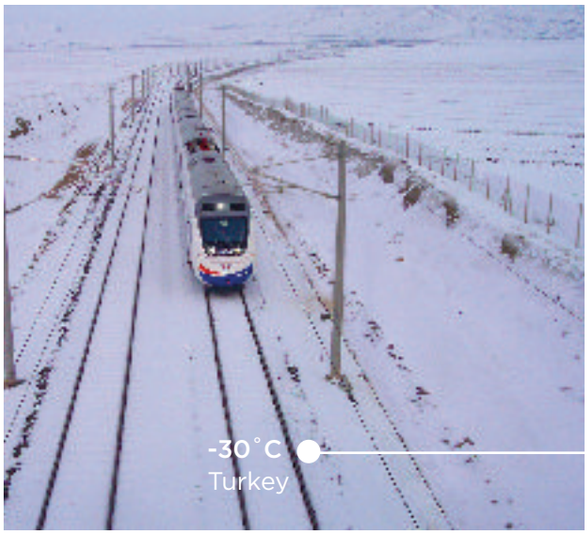
-30˚C
Turkey

50˚C
Saudi Arabia

1,5 Mach
Longest Supersonic Test Track in Europe
Turkey

NUMBERS KILOMETERS *Success*

1998

YAPIRAY is established by Yapı Merkezi

2000

First Tamping Work, Bursaray
40.300 m

Izmir Metro
23.200 m

2002

Kadıköy - Moda Nostalgic Tramway
2.938 m

2004

First Track Laying Project on Galata Opening Bridge, Eminönü - Kabataş Project
1.187 m

2005

First Special Design Work, Marmaray BC1

Eskişehir Tramway Project
32.550 m

UITP World Light System Award with Eskişehir Tramway

2010

Casablanca Tramway
40.000 m

Caroubier Storage Area
10.000 m

Bursaray Light Metro System
17.000 m

2011

The Track Installation Project of Marmaray and LVT Block Production
28.325 m

First Turn - Key High Speed Track Laying and Sleeper Delivery for Ankara - Konya High Speed Train Project
776.000 pcs

Bir Touta - Sidi Abdallah - Zeralda Railway Line
46.000 m

2012

Gökçedağ - Nusrat Railway Rehabilitation Project
110.000 m

2013

Hasanbey Logistics Center Construction
13.000 m

Construction of Second Line Between Tekirdağ Port and Muratlı
31.000 m

Unique Manufacturer of Slab Track in Turkey for Çatalca Tunnel - Istanbul
425 m

For Sidi Bel Abbes - Sétif Tramway, Technical Support and TW - 120 Types Blocks Production for Ballastless Track
41.000 m

2013

Official Subcontractor of Awash-Weldia Railway Project Trackworks Construction
420.000 m

the greatest work has been received by a Turkish contracting company alone until that, 450 km

Marmaray BC1 Bosphorus Project
28.325 m

Track Distance

Awards

On-going

2006

Zeytinburnu - Bağcılar Tramway Line
11.500 m

Track Construction of Taksim - Kabataş Funicular Line
1.280 m

2007

Ankara Metro Track Works
31.000 m

First Track Panel Prefabrication Project for Ankara - Istanbul
234.000 m

Kemalpaşa - Turgutlu Track and Turnout Works

2008

Sultançiftliği - Edirnekapı Tramway
30.600 m

2009

Konya Tramway
4.600 m

Kayseri Light Rail Project
35.630 m

UITP World Light System Award with Kayseray

2009

Rayton Concrete Sleeper Production to the Papua Indonesia Island for the Grasberg Railway Project

Eskişehir - İnönü High Speed Train Project
11.200 m

First Railway Sleeper Production

2015

Renewal of Bozkurt - Dinar in Konya
75.000 m

Internationally Qualification of Afyon Laboratory

2016

Rehabilition and Signalization of Irmak - Karabük Zonguldak Project
425.000 m

Antalya Tramway Line
23.843 m

Konya Adliye Tramway
18.000 m

2017

Mechanized Maintenance Works with Ballast Cleaning for Between Track Section Ulukışla and Çiftehan
30.000 m

2018

Yerköy - Sivas High Speed Line Superstructure and Electromechanic Works
517.000 m

Standard Gauge Railway (SGR) Line Between Dar es Salaam - Morogoro
301.000 m

Morogoro - Makatupora Track Installation
418.837 m

2018

TER Dakar - AIBD M1 Trackwork Design and Constrution Planning Works
87.000 m

TÜBİTAK - SAGE Test Line
2.000 m

Track Renewal Work on Irmak – Tüney and Çankırı - Kurşunlu Line
364.000 m

NUMBERS TELL
The Real Story

High Invesment
Budget for
R&D

750
Employees

Sleeper Production
1.000.000 pcs/year
Slab Track Production
20.000 pcs/year

300 km/h in
High Speed Lines

Supersonic Sled Test Track
1,5 Mach (1850 km/h)

Know-How

Finished: 1.24 Million Meters
On-going: 1.4 Million Meters

8 Countries
3 Continents

INTERACTIVE
EFFICIENT
ACCURATE
Serving Humanity

SOME OF OUR PROJECTS

yapray

Awash - Kombolcha - Hara Gebaya Railway Line
ETHIOPIA

Project Start - End Dates	06.2014/On-going
Line Length	428 km
Switch Type and Quantity	1/12 R=500, 37 Units 1/9 R=300, 69 Units
Sleeper Type	B58 - 2.5
Sleeper Quantity	700.000

Dar es Salaam - Morogoro - Makutupora Railway Line
TANZANIA

Project Start - End Dates	05.2018/On-going
Line Length	558 km
Switch Type and Quantity	1/24 R:1320, 13 Units 1/9 R:300, 155 Units 1/12 R:1500, 47 Units
Sleeper Type	Heavy Haul, Turnout and Bridge
Sleeper Quantity	1.200.000

Yerköy - Sivas High Speed Railway Line
TURKEY

Project Start - End Dates	05.2018/On-going
Line Length	417 km Ballasted and 101 km Ballastless Track
Switch Type and Quantity	1/12 R:500, 20 Units 1/9 R:300, 13 Units 1/24 R:2600/1600, 42 Units 1/18.5 R:1200, 27 Units
Sleeper Type	B07, B320, Turnout and Rayton Slab Track
Sleeper Quantity	730.000

Irmak - Karabük - Zonguldak Railway Rehabilitation Project
TURKEY

Project Start - End Dates	07.2017/01.2018
Switch Type and Quantity	1/9 - R:300, 200 Units
Sleeper Type	B58-2.4
Line Length	415 km Mainline, 65 km Siding
Sleeper Quantity	24.458

KAYADIBI

Ankara - Konya High Speed Railway Line

TURKEY

Project Start - End Dates	11.2008 - 08.2011
Line Length	465 km
Switch Type and Quantity	1/9 R:300, 2 Units 1/12 R:500, 46 Units 1/29 R:300, 10 Units 1/46 R:3550, 28 Units
Sleeper Type	B70
Sleeper Quantity	766.000

Marmaray BC1

TURKEY

Project Start - End Dates	2011/2013
Line Length	3 km Ballasted and 26 km Direct Fixation
Switch Type and Quantity	1/7 R:140, 7 Units 1/9 R:300, 5 Units
Sleeper Type	B70 and LVT Block

TÜBİTAK - SAGE
Test Campus
TURKEY

Project Start - End Dates	06.2017/09.2018
Track Length	2 km Supersonic Sled Test Track
Design Criteria	1000 kg/1.5 Mach
Max Speed	4.5 Mach
Max Payload	3500 kg
Fastening System	Special Yapıray Design
Buildings	Control Building Data Building Energetic Material Depots Administration Buildings

JÜBİTAV
SAGE

Other Projects

İzmir Metro	Turkey, 1998 - 2000
Kadıköy - Moda Nostalgic Tramway	Turkey, 2002 - 2003
ESTRAM - Eskişehir Tramway	Turkey, 2003 - 2004
Beyoğlu Nostalgic Tramway	Turkey, 2002 - 2003
Ankara Metro 3. Phase, Line Works	Turkey, 2003 - 2007
Galata Bridge Tram Laying Works	Turkey, 2003 - 2004
Eminönü - Sirkeci Tramway	Turkey, 2004 - 2005
Zeytinburnu - Bağcılar Tramway	Turkey, 2004 - 2006
Taksim - Kabataş Funicular	Turkey, 2005 - 2006
Kayseri Tramway	Turkey, 2006 - 2009
Hasanbey Logistic Center Trackwork	Turkey, 2011 - 2013
Tekirdağ - Muratlı Line Works	Turkey, 2011 - 2013
Bozkurt - Dinar Railway Line	Turkey, 2013 - 2015
Konya Tramway	Turkey, 2013 - 2015
Sidi Bel Abbes Tramway	Algeria, 2013 - 2017
Sétif Tramway	Algeria, 2014 - On-going
Casablanca Tramway	Morocco, 2016 - On-going
Ter Dakar M1 Railway Project	Senegal, 2018 - On-going
Kayaş - Yerköy Sleeper and Slab Track Production	Turkey, 2018 - On-going

Beyoğlu Nostalgic Tramway

Konya Tramway

Bozkurt - Dinar Railway Track Renewal

Taksim - Kabataş Funicular System

Eskişehir Light Rail System (Estram)

Casablanca Tramway

HI-TECH MACHINERY *Park and Equipments*

YAPIRAY has its own specified machinery park with a total value of approximately 50 million €. This machinery park is one of the most important advantages for key projects, like; new construction of high-speed & freight railway projects, maintenance and renewal of existing lines, various types of metro projects.

Machineries	Brands	Quantity
Tamping Machine, Dynamic Track Stabilizer & Regulator	Plasser & Theurer	13
Flash Butt Welding Machines	Schlatter	5
Track and Turnout Laying Machines	Vaicar/Lancer/PEM	9
Locomotives	LDH/LDE	8
Unimog	Mercedes-Benz	6
Railway Excavators	Liebherr/Atlas/O&K	11
Ballast (Hopper) Wagons	Faccpp Type	26
Silo Wagons	Ucs Types	15
Flat Wagons	Ks/La/Rgs/Smmns-w Types	54
Gantry Cranes	Bvs/Çesan	4

Plasser&Theurer
yapıray
RM 80 - UHR
yapıray

SLEEPERS
SLAB TRACK
Products

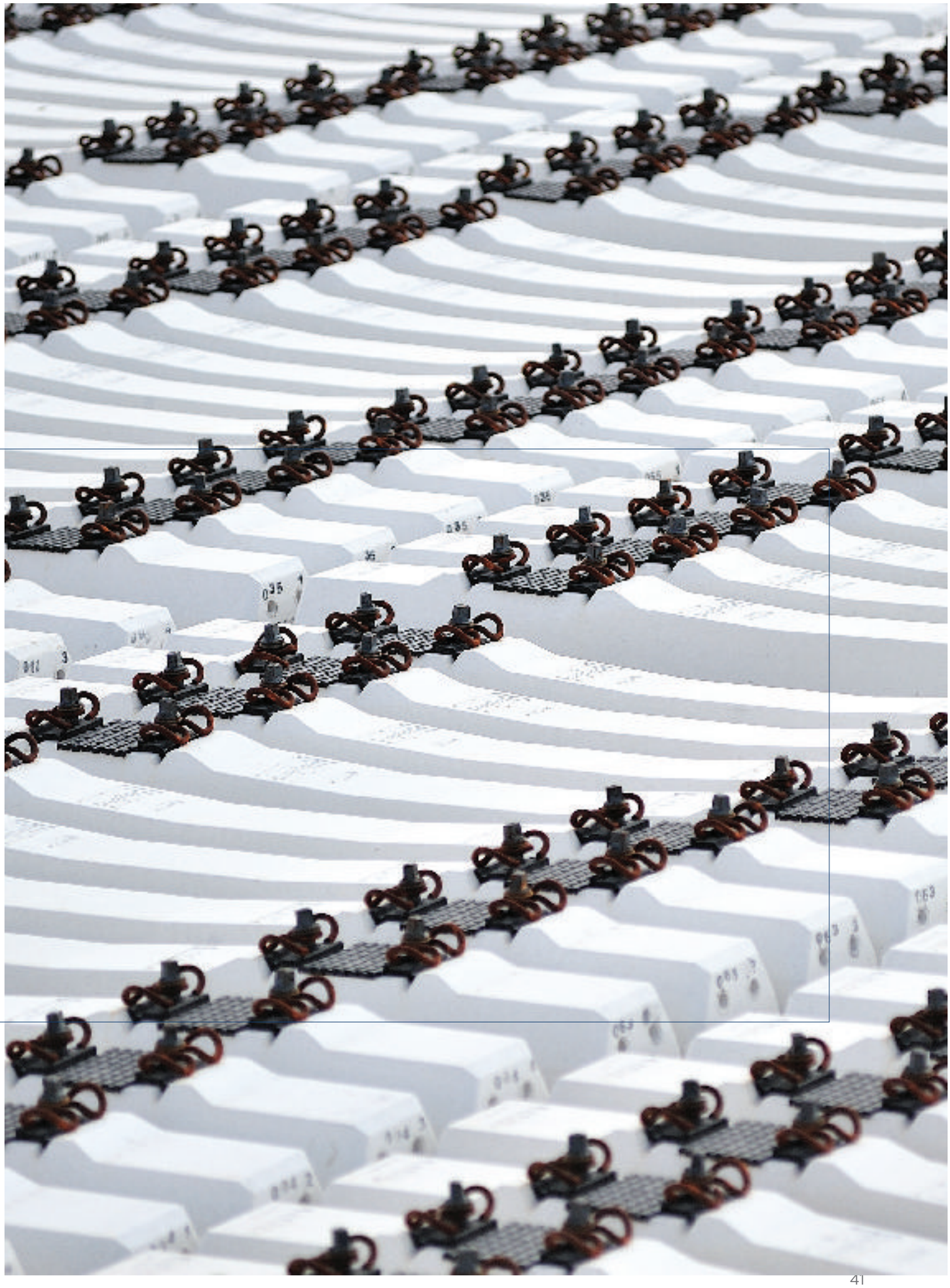

B07 PRESTRESSED *Sleeper*

TECHNICAL SPECIFICATIONS

* Marked lines are the values given for standard sleepers and can be modified to meet different requirements.

Design Axle Load*	250 kN	Concrete Quality*	C50/60
Design Speed*	300 km/h	Volume	140 dm^3
Rail Type*	60 E2, 60 E1 (UIC 60)	Weight (excluding rail fastenings)*	350 kg
Rail Fastening Type*	W21	Sleeper Shoulder	1814 mm
Real Seat Cant*	1:40	Total Area of Sleeper Bottom	7944 cm^2
Gauge	$1436^{-1/+2}$ mm	Intended Purpose	Mainline Sleeper

B07 PRESTRESSED CONCRETE SLEEPER

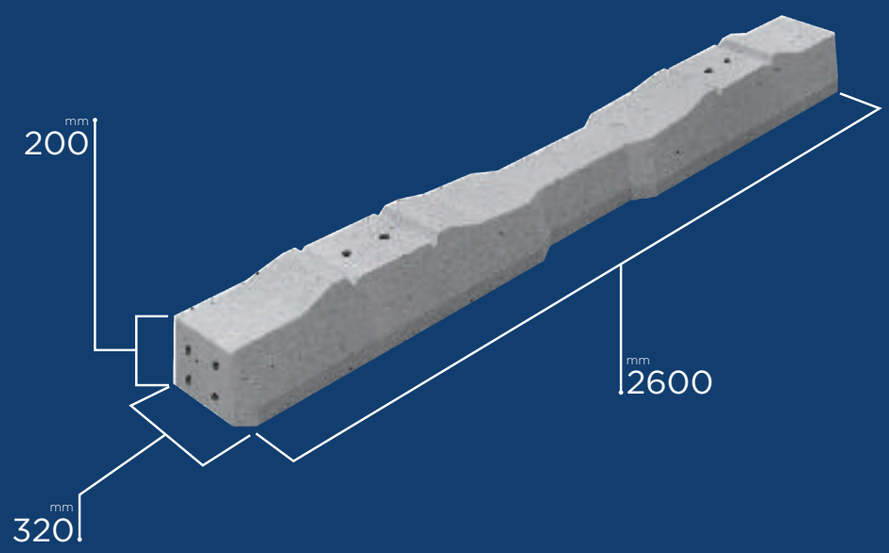

Side View

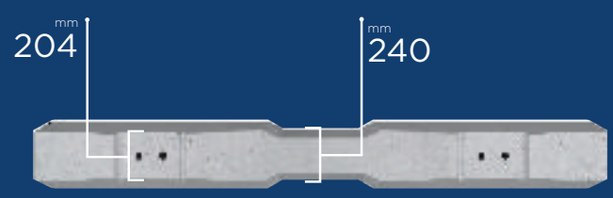

Top View

All information given as part of this brochure cannot be used, copied or published without the knowledge of YAPIRAY.
YAPIRAY resertes this right to change the information within the scope of this brochure.
RAYTON, RAYKAS and PANELRAY are registered brands of YAPIRAY.

B70 PRESTRESSED *Sleeper*

rayton

TECHNICAL SPECIFICATIONS

* Marked lines are the values given for standard sleepers and can be modified to meet different requirements.

Design Axle Load*	250 kN	Concrete Quality*	C65/80
Design Speed*	300 km/h	Volume	115 dm^3
Rail Type*	60 E2, 60 E1	Weight (excluding rail fastenings)*	294,5 kg
Rail Fastening Type*	W14	Sleeper Shoulder	1813 mm
Rail Seat Cant*	1:40	Total Area of Sleeper Bottom	6832 cm^2
Gauge	$1435^{-1/+2}$ mm	Intended Purpose	Mainline Sleeper

B70 PRESTRESSED CONCRETE SLEEPER

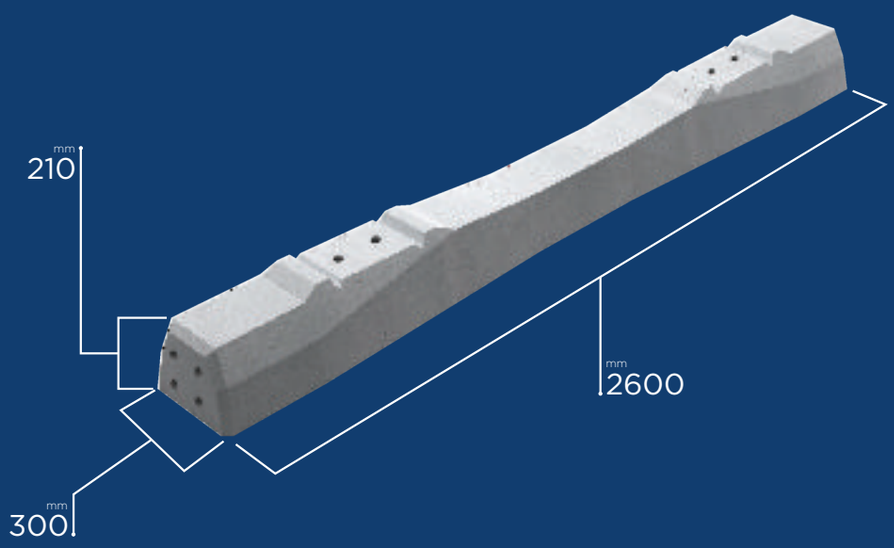

Side View

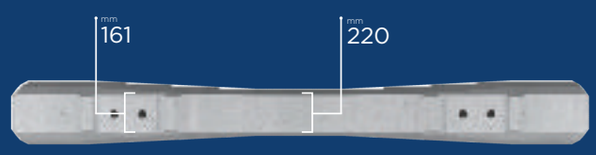

Top View

All information given as part of this brochure cannot be used, copied or published without the knowledge of YAPIRAY.
YAPIRAY resertes this right to change the information within the scope of this brochure.
RAYTON, RAYKAS and PANELRAY are registered brands of YAPIRAY.

HH (HEAVY HAUL) PRESTRESSED *Sleeper*

TECHNICAL SPECIFICATIONS

* Marked lines are the values given for standard sleepers and can be modified to meet different requirements.

Design Axle Load*	350 kN - 250 kN	Concrete Quality*	C50/60
Design Speed*	120 km/h - 160 km/h	Volume	143 dm^3
Rail Type*	60 E1	Weight (excluding rail fastenings)*	353.2 kg
Rail Fastening Type*	W14 HH	Sleeper Shoulder	1823 mm
Real Seat Cant*	1:20	Total Area of Sleeper Bottom	7280 cm^2
Gauge	$1435^{-1/+2}$ mm	Intended Purpose	Mainline Sleeper

HH (Heavy Haul) PRESTRESSED CONCRETE SLEEPER

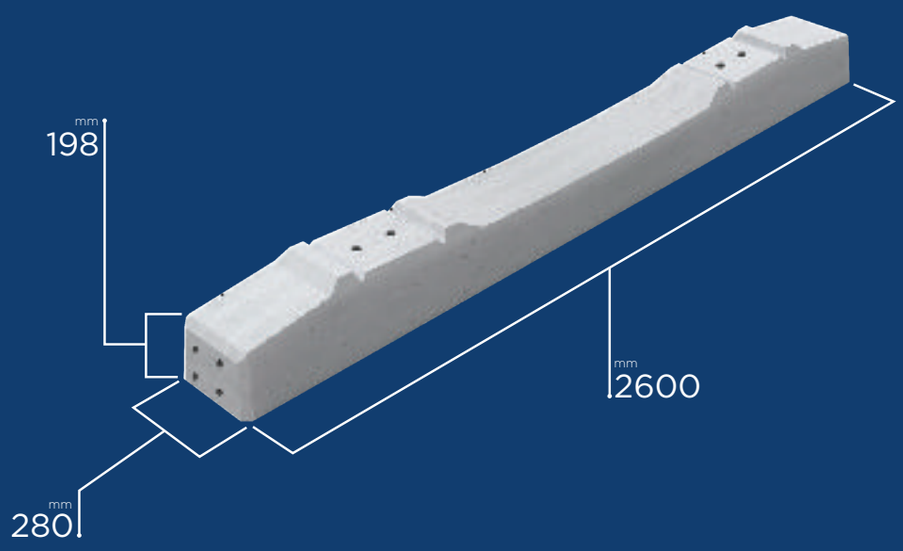

Side View

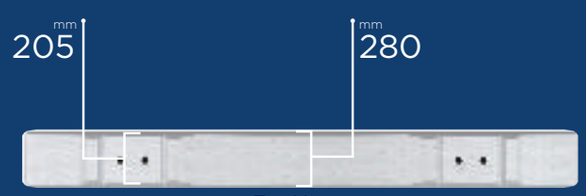

Top View

All information given as part of this brochure cannot be used, copied or published without the knowledge of YAPIRAY.
YAPIRAY resertes this right to change the information within the scope of this brochure.
RAYTON, RAYKAS and PANELRAY are registered brands of YAPIRAY.

B70 - DG PRESTRESSED *Sleeper*

TECHNICAL SPECIFICATIONS

* Marked lines are the values given for standard sleepers and can be modified to meet different requirements.

Design Axle Load*	225 kN	Concrete Quality*	C50/60
Design Speed*	160 km/h - 120 km/h	Volume	118 dm^3
Rail Type*	54 E1	Weight (excluding rail fastenings)*	285 kg
Rail Fastening Type*	W14	Sleeper Shoulder	1808.2 mm / 1373.2 mm
Real Seat Cant*	1:20	Total Area of Sleeper Bottom	6520 cm^2
Gauge	$1435^{-1/+2}$ mm - $1000^{-1/+2}$ mm	Intended Purpose	Mainline Sleeper

B70 - DG PRESTRESSED CONCRETE SLEEPER

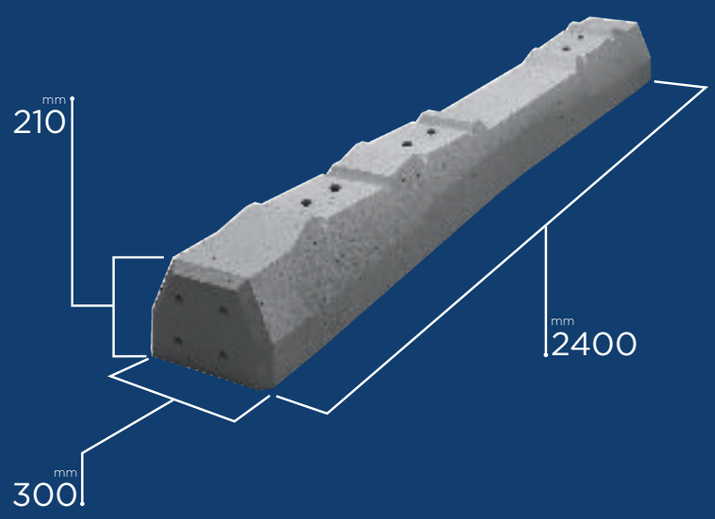

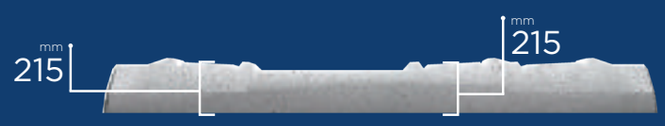

Side View

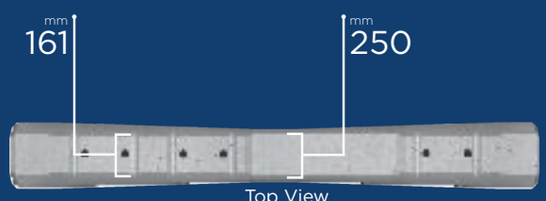

Top View

All information given as part of this brochure cannot be used, copied or published without the knowledge of YAPIRAY.
YAPIRAY resertes this right to change the information within the scope of this brochure.
RAYTON, RAYKAS and PANELRAY are registered brands of YAPIRAY.

B70 2.4 PRESTRESSED *Sleeper*

TECHNICAL SPECIFICATIONS

* Marked lines are the values given for standard sleepers and can be modified to meet different requirements.

Design Axle Load*	250 kN	Concrete Quality*	C50/60
Design Speed*	160 km/h	Volume	105 dm^3
Rail Type*	60 E1	Weight (excluding rail fastenings)*	250 kg
Rail Fastening Type*	W14	Sleeper Shoulder	1813 mm
Real Seat Cant*	1:20	Total Area of Sleeper Bottom	6232 cm^2
Gauge	$1435^{-1/+2}$ mm	Intended Purpose	Mainline Sleeper

B70 2.4 PRESTRESSED CONCRETE SLEEPER

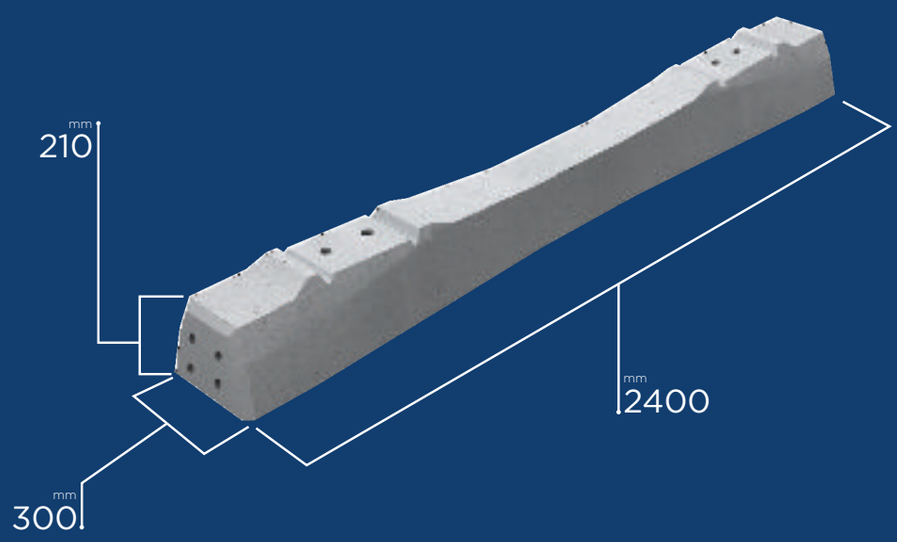

Side View

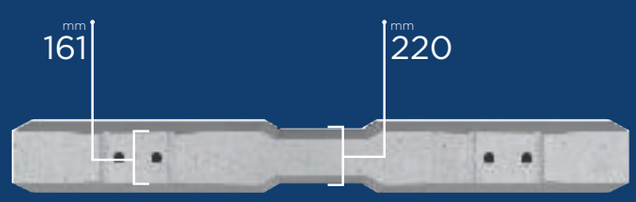

Top View

All information given as part of this brochure cannot be used, copied or published without the knowledge of YAPIRAY.
YAPIRAY resertes this right to change the information within the scope of this brochure.
RAYTON, RAYKAS and PANELRAY are registered brands of YAPIRAY.

B58 2.4 PRESTRESSED *Sleeper*

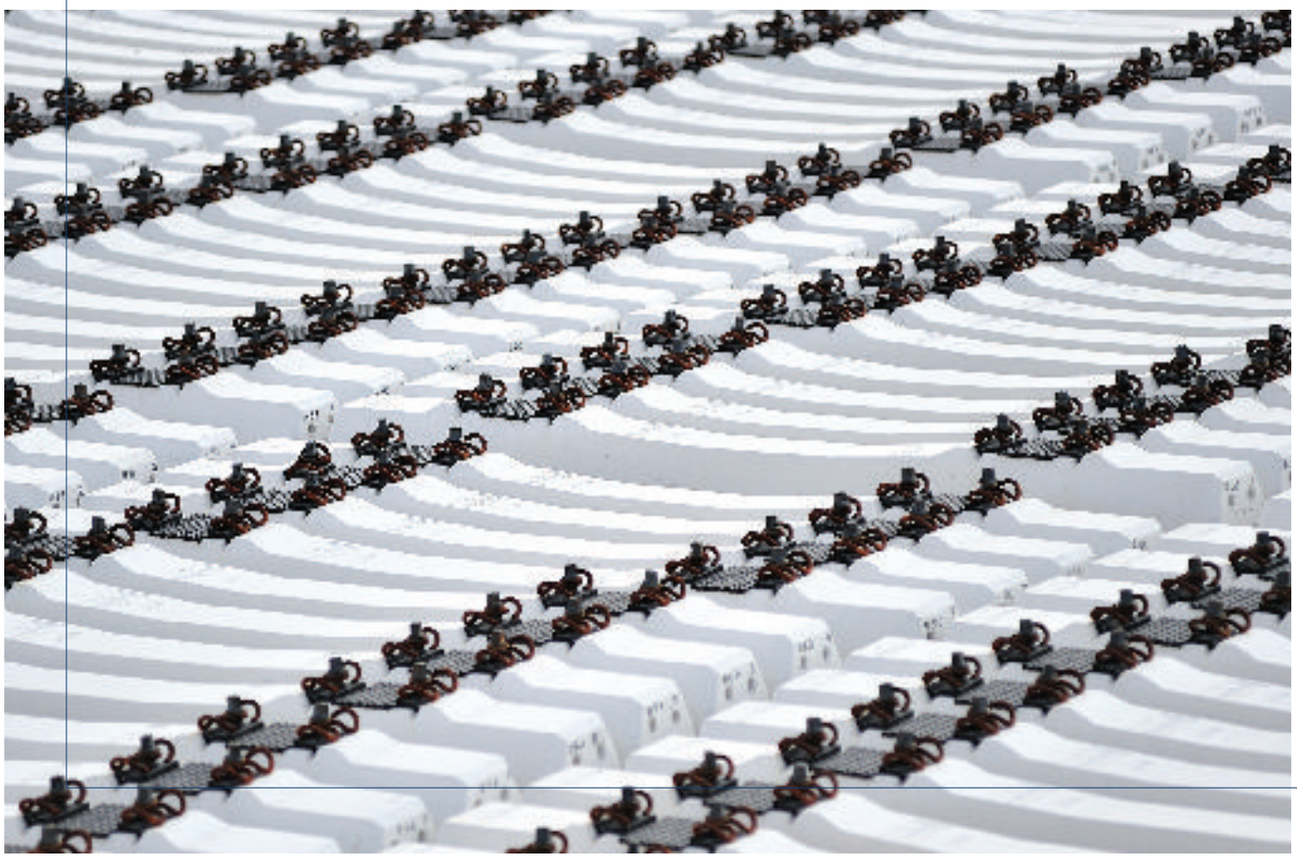

TECHNICAL SPECIFICATIONS

* Marked lines are the values given for standard sleepers and can be modified to meet different requirements.

Design Axle Load*	250 kN	Concrete Quality*	C50/60
Design Speed*	160 km/h	Volume	102.5 dm^3
Rail Type*	49 E1	Weight (excluding rail fastenings)*	255 kg
Rail Fastening Type*	W14	Sleeper Shoulder	1783 mm
Real Seat Cant*	1:40	Total Area of Sleeper Bottom	6128 cm^2
Gauge	$1435^{-1/+2}$ mm	Intended Purpose	Mainline Sleeper

B58 2.4 PRESTRESSED CONCRETE SLEEPER

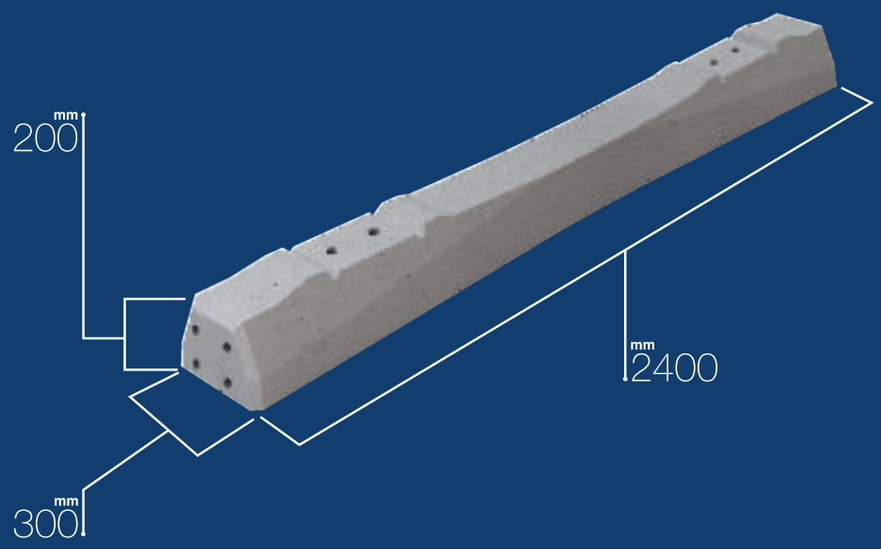

Side View

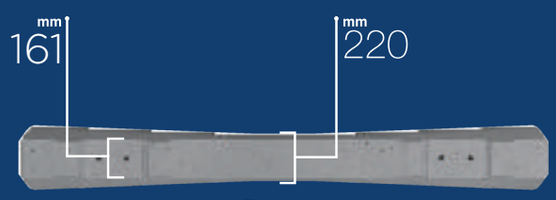

Top View

All information given as part of this brochure cannot be used, copied or published without the knowledge of YAPIRAY.
YAPIRAY resertes this right to change the information within the scope of this brochure.
RAYTON, RAYKAS and PANELRAY are registered brands of YAPIRAY.

B58 2.5 PRESTRESSED *Sleeper*

TECHNICAL SPECIFICATIONS

* Marked lines are the values given for standard sleepers and can be modified to meet different requirements.

Design Axle Load*	250 kN	Concrete Quality*	C50/60
Design Speed*	120 km/h	Volume	107 dm^3
Rail Type*	54 E1 (UIC 54)	Weight (excluding rail fastenings)*	286 kg
Rail Fastening Type*	W14	Sleeper Shoulder	1800 mm
Real Seat Cant*	1:40	Total Area of Sleeper Bottom	6520 cm^2
Gauge	$1435^{-1/+2}$ mm	Intended Purpose	Mainline Sleeper

B58 2.5 PRESTRESSED CONCRETE SLEEPER

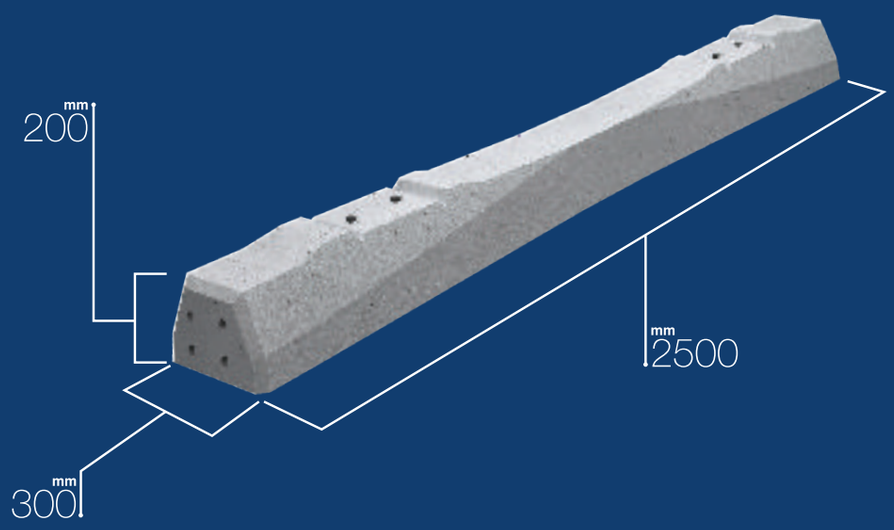

Side View

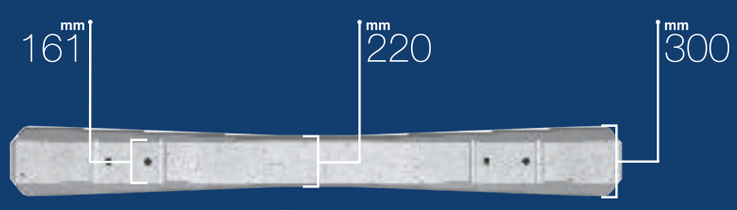

Top View

All information given as part of this brochure cannot be used, copied or published without the knowledge of YAPIRAY.
YAPIRAY resertes this right to change the information within the scope of this brochure.
RAYTON, RAYKAS and PANELRAY are registered brands of YAPIRAY.

B320 PRESTRESSED *Sleeper*

TECHNICAL SPECIFICATIONS

* Marked lines are the values given for standard sleepers and can be modified to meet different requirements.

Design Axle Load*	250 kN	Concrete Quality*	C65/80
Design Speed*	300 km/h	Volume	159 dm^3
Rail Type*	60 E2	Weight (excluding rail fastenings)*	397.5 kg
Rail Fastening Type*	System 300 and System KS	Sleeper Shoulder	1892 mm
Real Seat Cant*	1:40	Total Area of Sleeper Bottom	7768 cm^2
Gauge	$1436^{-1/+2}$ mm	Intended Purpose	Transition Zone Sleeper

B320 PRESTRESSED CONCRETE SLEEPER

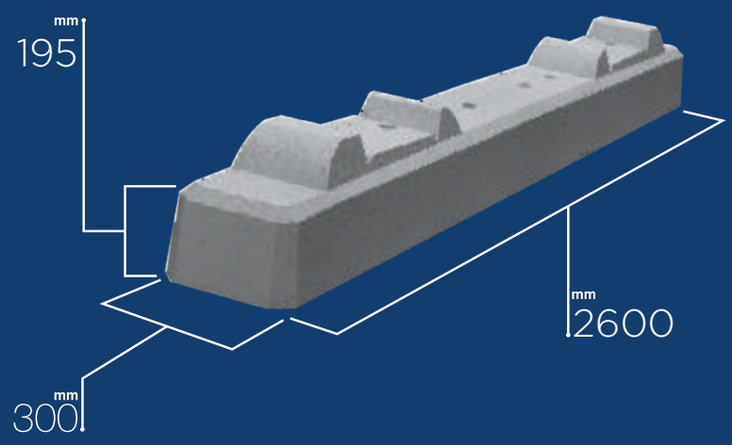

Side View

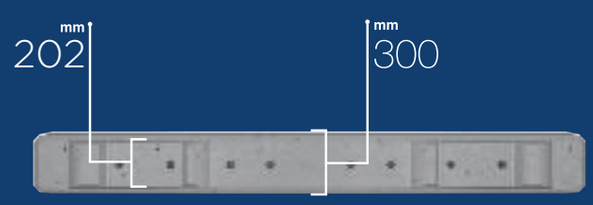

Top View

All information given as part of this brochure cannot be used, copied or published without the knowledge of YAPIRAY.
YAPIRAY resertes this right to change the information within the scope of this brochure.
RAYTON, RAYKAS and PANELRAY are registered brands of YAPIRAY.

M450 V PRESTRESSED *Sleeper*

TECHNICAL SPECIFICATIONS

* Marked lines are the values given for standard sleepers and can be modified to meet different requirements.

Design Axle Load*	225 kN	Concrete Quality*	C50/60
Design Speed*	160 km/h	Volume	111.8 dm^3
Rail Type*	60 E1	Weight (excluding rail fastenings)*	285 kg
Rail Fastening Type*	W14	Sleeper Shoulder	1820 mm
Real Seat Cant*	1:20	Total Area of Sleeper Bottom	6586 cm^2
Gauge	$1435^{-1/+2}$ mm	Intended Purpose	Mainline Sleeper

M450 V PRESTRESSED CONCRETE SLEEPER

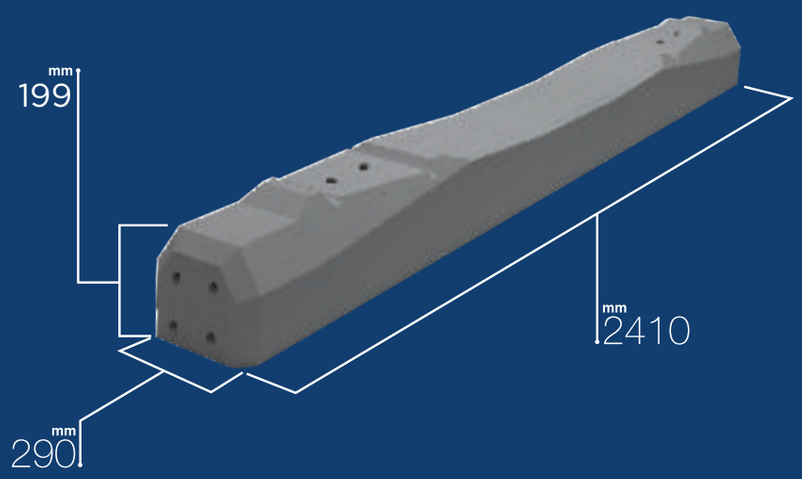

Side View

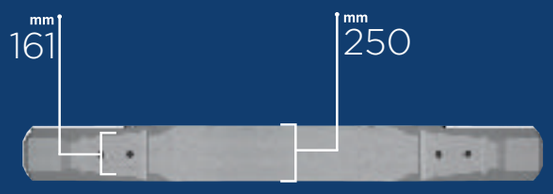

Top View

All information given as part of this brochure cannot be used, copied or published without the knowledge of YAPIRAY.
YAPIRAY resertes this right to change the information within the scope of this brochure.
RAYTON, RAYKAS and PANELRAY are registered brands of YAPIRAY.

PRESTRESSED BRIDGE *Sleeper*

TECHNICAL SPECIFICATIONS

* Marked lines are the values given for standard sleepers and can be modified to meet different requirements.

Design Axle Load*	250 - 350 kN	Concrete Quality*	C50/60
Design Speed*	300 - 160 km/h	Volume	165 dm^3
Rail Type*	All Types	Weight (excluding rail fastenings)*	414.7 kg
Rail Fastening Type*	System KS 24	Total Area of Sleeper Bottom	7800 cm^2
Real Seat Cant*	Various	Intended Purpose	Bridge Sleeper
Gauge	Various		

Bridge Sleeper for Guard Rail

PRESTRESSED CONCRETE SLEEPER

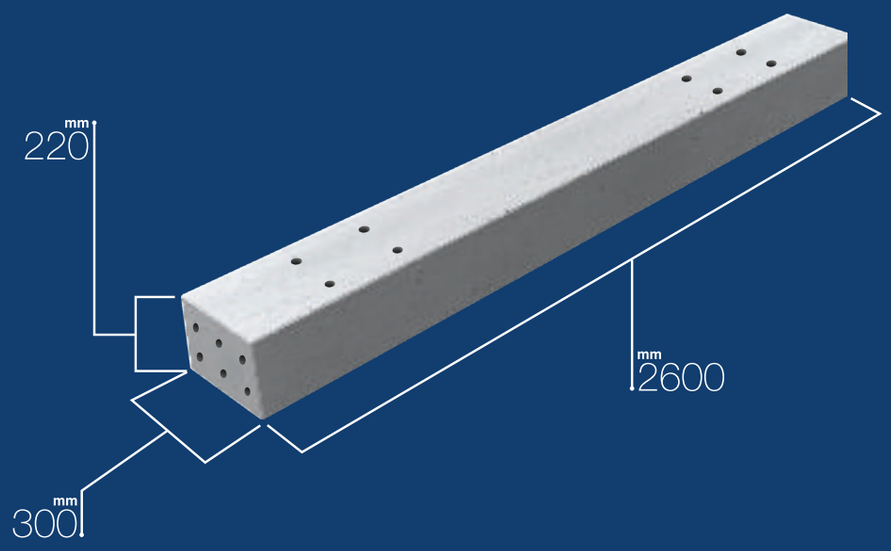

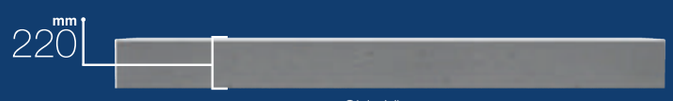

Side View

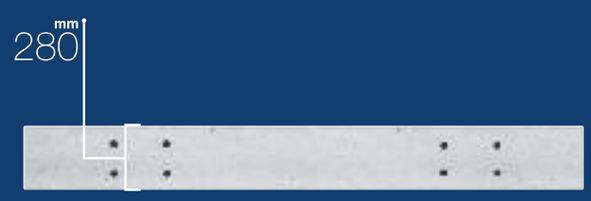

Top View

All information given as part of this brochure cannot be used, copied or published without the knowledge of YAPIRAY.
YAPIRAY resertes this right to change the information within the scope of this brochure.
RAYTON, RAYKAS and PANELRAY are registered brands of YAPIRAY.

TURNOUT
Sleeper

TECHNICAL SPECIFICATIONS

* Marked lines are the values given for standard sleepers and can be modified to meet different requirements.

Design Axle Load*	250 - 350 kN	Concrete Quality*	C65/80
Design Speed*	300 - 160 km/h	Volume	63.8 dm^3 /m
Rail Type*	All Types	Weight (excluding rail fastenings)*	160 kg/m
Rail Fastening Type*	W12 or W21T	Total Area of Sleeper Bottom	3000 cm^2 /m
Real Seat Cant*	-	Intended Purpose	Turnout Sleeper
Gauge	$1435^{-1/+2}$ mm		

Turnout Sleeper

PRESTRESSED CONCRETE SLEEPER

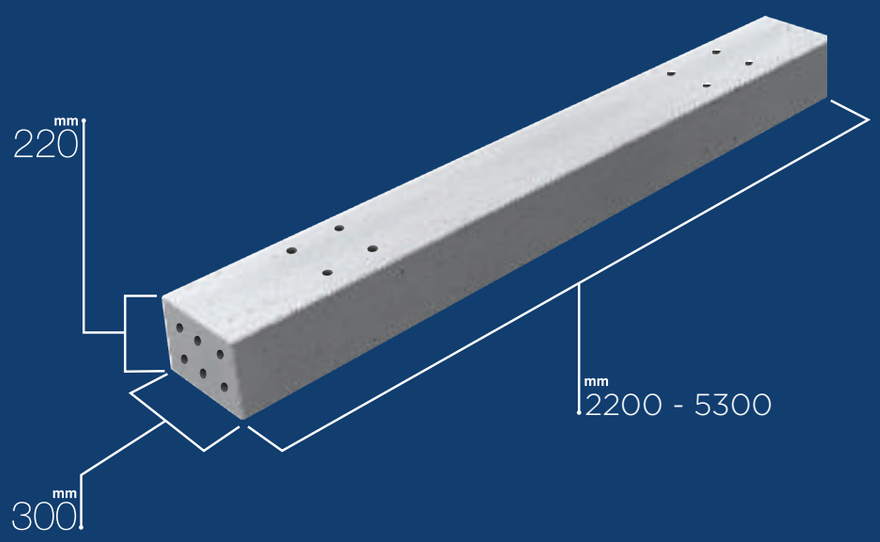

Side View

Top View

All information given as part of this brochure cannot be used, copied or published without the knowledge of YAPIRAY.
YAPIRAY resertes this right to change the information within the scope of this brochure.
RAYTON, RAYKAS and PANELRAY are registered brands of YAPIRAY.

RAYTON
Slab Track

TECHNICAL SPECIFICATIONS

* Marked lines are the values given for standard sleepers and can be modified to meet different requirements.

Design Axle Load*	LM 71	Gauge	$1436^{-1/+2}$ mm
Axle Load	250 kN	Concrete Quality*	C50/60
Design Speed*	300 km/h	Weight (excluding rail fastenings)*	6240 kg
Rail Type*	60 E2	Total Area of Bottom	118750 cm^2
Rail Fastening Type*	System 300-1	Foundation Type*	Various
Real Seat Cant*	1:40		

Rayton Slab Track

Two different types of Rayton Slab Track are available

- Rayton Post-tensioned Concrete Slab Track
- Rayton Reinforced Concrete Slab Track

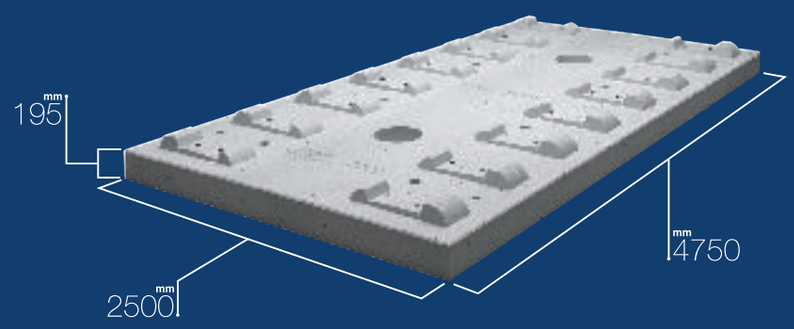

Side View

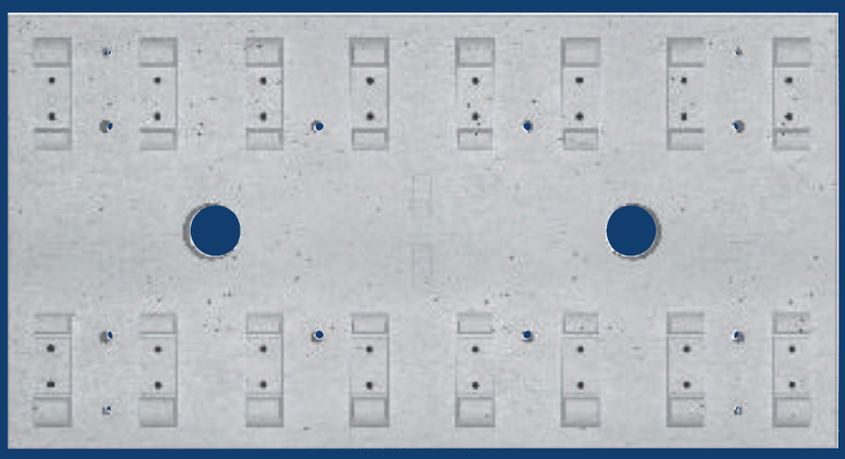

Top View

All information given as part of this brochure cannot be used, copied or published without the knowledge of YAPIRAY.
YAPIRAY resertes this right to change the information within the scope of this brochure.
RAYTON, RAYKAS and PANELRAY are registered brands of YAPIRAY.

RAYTON

Slab Track 2.35

TECHNICAL SPECIFICATIONS

* Marked lines are the values given for standard sleepers and can be modified to meet different requirements.

Design Axle Load*	LM 71	Gauge	$1436^{-1/+2}$ mm
Axle Load	250 kN	Concrete Quality*	C50/60
Design Speed*	300 km/h	Weight (excluding rail fastenings)*	3087 kg
Rail Type*	60 E2	Total Area of Sleeper Bottom	58750 cm^2
Rail Fastening Type*	System 300-1	Foundation Type *	Various
Real Seat Cant*	1:40		

Rayton Slab Track 2.35 (RC)

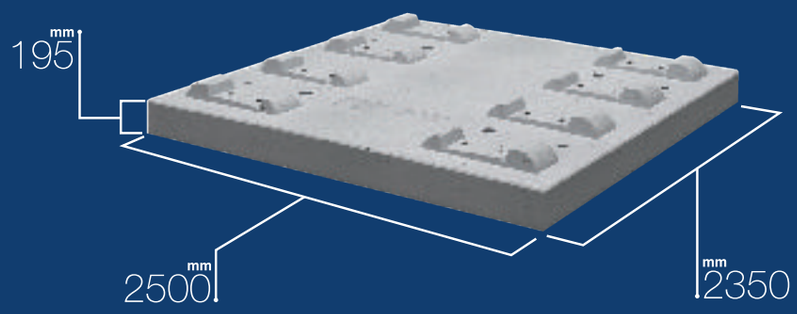

Side View

Top View

All information given as part of this brochure cannot be used, copied or published without the knowledge of YAPIRAY.
YAPIRAY resertes this right to change the information within the scope of this brochure.
RAYTON, RAYKAS and PANELRAY are registered brands of YAPIRAY.

TB-12 REINFORCED *Sleeper*

TECHNICAL SPECIFICATIONS

* Marked lines are the values given for standard sleepers and can be modified to meet different requirements.

Design Axle Load*	165 kN	Concrete Quality*	C50/60
Design Speed*	80 km/h	Volume	57 dm^3
Rail Type*	41 GPU	Weight (excluding rail fastenings)*	148 kg
Real Seat Cant*	-	Total Area of Sleeper Bottom	1829 cm^2
Gauge	$1435^{-1/+2}$ mm	Intended Purpose	Mainline Sleeper

TB -12 REINFORCED CONCRETE SLEEPER

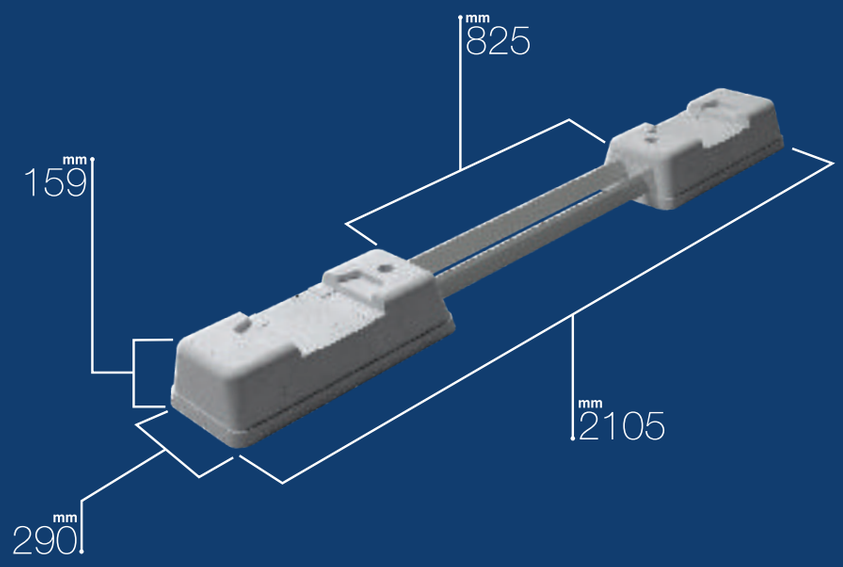

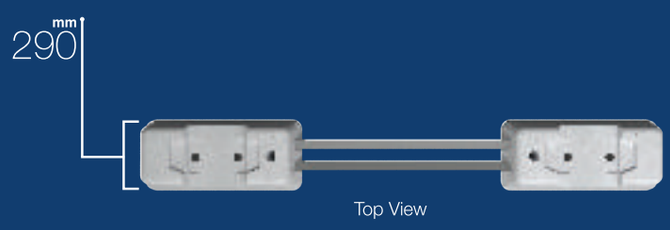

All information given as part of this brochure cannot be used, copied or published without the knowledge of YAPIRAY.
YAPIRAY resertes this right to change the information within the scope of this brochure.
RAYTON, RAYKAS and PANELRAY are registered brands of YAPIRAY.

PRODUCT *References*

MAINLINE SLEEPERS

	Production Name	Rail Type	Sleeper Type	Quantity	Project / Employee
1	B70 Monoblock Concrete Sleeper	60E1	Monoblock	873.251	TCDD (Production Between 2009 - 2018)
2	B70 Monoblock Concrete Sleeper	60E1	Monoblock	708080	Ankara - Konya YHT Line / TCDD
3	B70 Monoblock Concrete Sleeper	60E1	Monoblock	23000	Hasanbey Logistics Center / TCDD
4	Sonneville Booted Block	60E1	LVT Block	90.500	Marmaray BC1 / TGN JV
5	B70 Monoblock Concrete Sleeper	60E1	Monoblock	120.968	Renewal of Bozkurt - Dinar / TCDD
6	B58 Monoblock Concrete Sleeper	49E1	Monoblock	238.000	Rehabilition and Signalization of IKZ Project / TCDD
7	B58 Monoblock Concrete Sleeper	54E1	Monoblock	441.000	Awash - Weldia Railway Project Trackworks Construction
8	B70 Monoblock Concrete Sleeper	60E1	Monoblock	40.000	ALSTOM Transport / Papua New Gine Mine Line
9	B58 Monoblock Concrete Sleeper	49E1	Monoblock	31.000	Antalya Tramway / Antalya
10	TW120	41GPU	Bi Block	46.989	Sétif Tramway / Algeria
11	TW120	41GPU	Bi Block	40.434	Sidi Bel Abbes Tramway Line / Algeria
12	YMPFB Block	60Ri	Block	85.750	ESTRAM - Eskişehir Tramway Line
13	B58 Monoblock Concrete Sleeper	49E1	Monoblock	199.576	Track Renewal Work on Irmak - Tuney - Kurşunlu / TCDD
14	B07 Monoblock Concrete Sleeper	60E2	Monoblock	650.000	Yerköy - Sivas High Speed Line / TCDD
15	Panelray Prefabricated Slab Track	60E2	Slab Track	21.000	Yerköy - Sivas High Speed Line / TCDD
16	B07 Monoblock Concrete Sleeper	60E2	Monoblock	430.000	Kayaş - Yerköy High Speed Line / TCDD
17	B70 Monoblock Concrete Sleeper	60E2	Monoblock	30.000	Kayaş - Yerköy High Speed Line / TCDD
18	Panelray Prefabricated Slab Track	60E2	Slab Track	12.000	Kayaş - Yerköy High Speed Line/TCDD
19	Bridge Sleeper	54E1	Bridge	17.500	Awash - Weldia Railway Project Trackworks Construction

TURNOUT SLEEPERS

	Production Name	Rail Type	Turnout Type	Length in Meters	Project / Employee
1	Turnout Sleeper	60E1	1/9 R:300	19.118 m	Hasanbey Logistics Center / TCDD
2	Turnout Sleeper	60E1	1/9 R:300	1.694 m	Tekirdağ - Muratlı Railway Line / TCDD
3	Turnout Sleeper	49E1	1/9 R:300	24.200 m	Rehabilition and Signalization of IKZ Project / TCDD
5	Turnout Sleeper	54E1	1/9 R:300	24.442 m	Awash - Weldia Railway Project Trackworks Construction
6	Turnout Sleeper	60E1	1/9 R:300	17.182 m	VAE Turnout / Turkey Plant
7	Turnout Sleeper	60E1	1/9 R:300	2.420 m	Renewal of Bozkurt - Dinar / TCDD
8	Turnout Sleeper	60E1	1/9 R:300	726 m	Rehabilition and Signalization of IKZ Project / TCDD

RESEARCH AND DEVELOPMENT *Laboratory*

In parallel with technologies developing currently, as in many sectors, construction and superstructure sector have experienced important changes. Our objective is the follow innovation and technology and achieve required standard and quality.

Our laboratories have been established in accordance with TS EN ISO/IEC 17025 and aim to operate with the quality management system and ensuring testing services with internationally approved methods. It is aimed to get qualified, fast, reliable testing results for maximum customer satisfaction.

TESTED MATERIAL	NAME OF THE TEST	TESTING MODULE
AGGREGATE	Measurement of Particle Size Distribution via Screening Method	EN 933 - 1
AGGREGATE	Measurement of Loose Bulk Intensity and Clearance Volume	EN 1097 - 3
AGGREGATE	Measurement of Water Content via Drying in a Ventilated Oven	EN 1097 - 5
AGGREGATE	Measurement of Particle Density and Water Absorption Rate	EN 1097 - 6
AGGREGATE	Measurement of Thin Particles Methylene Blue Test	EN 933 - 9
FRESH CONCRETE	Slump Test	EN 12350 - 2
FRESH CONCRETE	Intensity Test	EN 12350 - 6
FRESH CONCRETE	Measurement of Air Content (Pressure Methods)	EN 12350 - 7
HARDENED CONCRETE	Measurement Compressive Strength of Test Samples	EN 12390 - 3
SLEEPER	Measuring Dimensions	EN 13230 - 1
SLEEPER	Positive and Negative Moment Test	EN 13230 - 2
RAIL	Bending Test for Butt-Welded Rails	EN 14587 - 2
RAIL	Bending Test for Alumino Thermic Welded Rails	EN 14730 - 1 + Al

SAFETY QUALITY *Certificates*

ISO 9001:2015

International Organization for Standardization ISO 14001:2015

OHSAS 18001 2007

GROUP COMPANIES

yapı merkezi
HOLDING ANONİM ŞİRKETİ
HOLDING INCORPORATED

yapı merkezi
İNŞAAT VE SANAYİ ANONİM ŞİRKETİ
CONSTRUCTION AND INDUSTRY INC.

yapıray

yapı merkezi
Gayrimenkul Grubu

idis

FREYSAŞ

SUBOR®

"Eğitimde fark, IRMAK"
IRMAK OKULLARI

Main Branch:
Kısıklı Mah. Alemdağ Cad. Masaldan İş Merkezi
No: 60 E Blok No: 5 Üsküdar / İSTANBUL

Phone : +90 216 521 30 00
Fax : +90 216 505 54 21
: +90 216 505 54 22

info@yapiray.com.tr
ik@yapiray.com.tr
rayton@yapiray.com.tr

www.yapiray.com.tr

yapıray